REVISIONS				
REV.	ECO NO.	DESCRIPTION	DATE	BY
B	1845	UPDATE TOLERANCE BLOCK, ADD DIM .163[4.15]	11/06/2008	JH
C	1909	ADD 'V' PLATING, UPDATE NOTES	02/04/2009	JH
D	2149	REMOVE 'E' PLATING, UPDATE NOTES 10, AVAILABLE POSITION NUMBERS	06/15/2010	LH
E	2835	UPDATE NOTE 4 (WAS OPERATING TEMP, -45˚C TO +85˚C)	4/21/2014	JHSU
F	3219	UPDATE INSULATOR COLOR OPTIONS, UPDATE SR HEIGHT TO 11.10mm (WAS 10.98mm), UPDATE CAP HEIGHT TO 8.85mm (WAS 8.80mm)	11/25/2015	MG

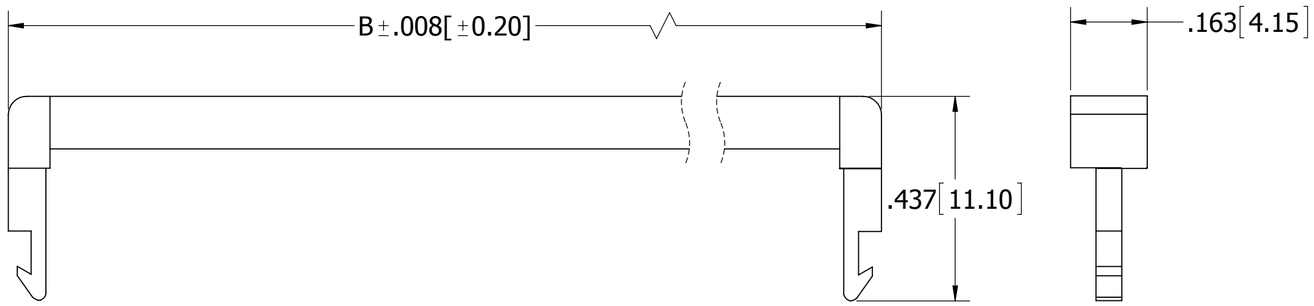

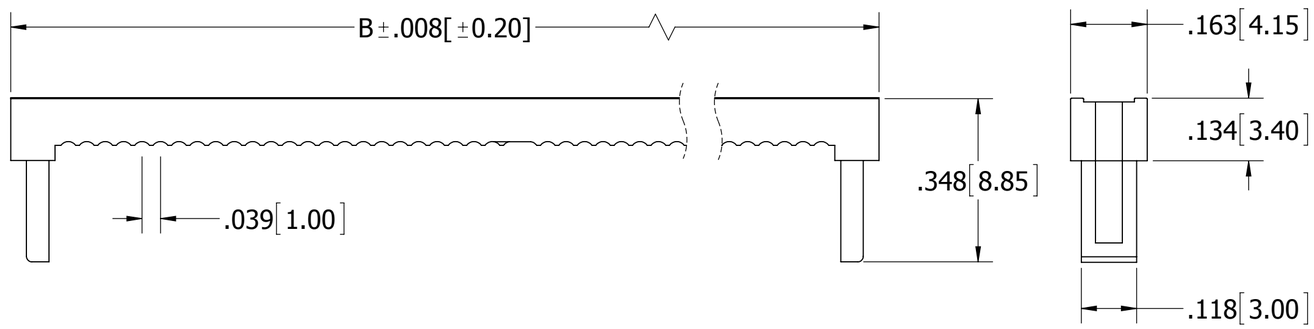

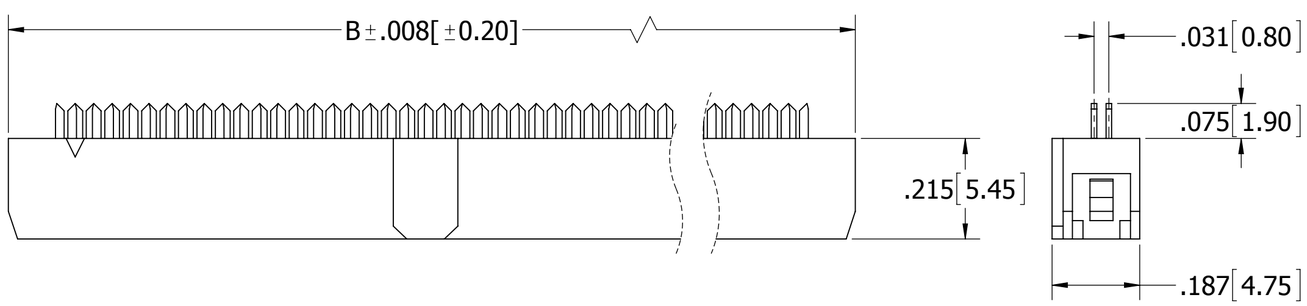

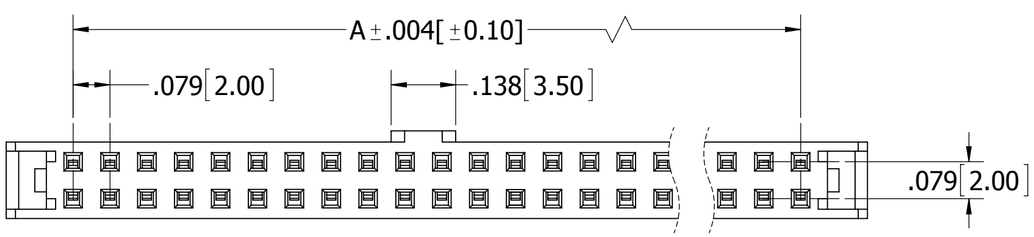

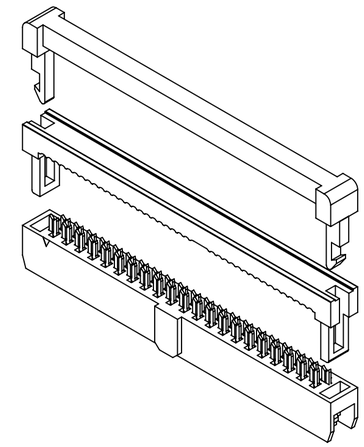

PART NUMBER CODING
SFH213-PP_N-D_ _-ID-BK

NUMBER OF POSITIONS
(CONTACTS PER ROW)

PLATING
P = GOLD FLASH OVERALL
V = GOLD FLASH ON CONTACT SURFACE, NICKEL ON TERMINATION

PART NUMBER	POSITIONS/ CONTACTS	A		B	
		IN	MM	IN	MM
SFH213-PP_N-D05-ID-BK	05/10	.315	8.00	.600	15.25
SFH213-PP_N-D06-ID-BK	06/12	.394	10.00	.679	17.25
SFH213-PP_N-D07-ID-BK	07/14	.472	12.00	.758	19.25
SFH213-PP_N-D08-ID-BK	08/16	.551	14.00	.837	21.25
SFH213-PP_N-D10-ID-BK	10/20	.709	18.00	.994	25.25
SFH213-PP_N-D11-ID-BK	11/22	.787	20.00	1.073	27.25
SFH213-PP_N-D12-ID-BK	12/24	.866	22.00	1.152	29.25
SFH213-PP_N-D13-ID-BK	13/26	.945	24.00	1.230	31.25
SFH213-PP_N-D15-ID-BK	15/30	1.102	28.00	1.388	35.25
SFH213-PP_N-D17-ID-BK	17/34	1.260	32.00	1.545	39.25
SFH213-PP_N-D20-ID-BK	20/40	1.496	38.00	1.781	45.25
SFH213-PP_N-D22-ID-BK	22/44	1.654	42.00	1.939	49.25
SFH213-PP_N-D25-ID-BK	25/50	1.890	48.00	2.175	55.25

NOTES:
1. INSULATOR MATERIAL: PBT 30% GLASS FIBER, BLACK
2. CONTACT MATERIAL: PHOSPHOR BRONZE
3. PLATING: SEE PART NUMBER CODING
4. OPERATING TEMPERATURE: -40˚C TO +105˚C
5. UL FLAMMABILITY RATING: 94V-0
6. CURRENT RATING: 1 AMP PER CONTACT
7. INSULATION RESISTANCE: 1,000M OHMS MIN.
8. CONTACT RESISTANCE: 30 MILLIOHMS MAX.
9. DIELECTRIC WITHSTANDING: 500 VAC
10. MATES WITH SBH21 SERIES
11. FOR .039"[1.00mm] PITCH FLAT CABLE, 26 - 28 AWG WIRE RANGE

RoHS COMPLIANT

UNLESS OTHERWISE SPECIFIED:
DIMENSIONS ARE IN INCHES [MM]

TOLERANCES:

ANGULAR: ± 1°

DECIMALS
.XX = ± .012 [.3]
.XXX = ± .008 [.20]
.XXXX = ± .0040 [.100]

DRAWN	DATE	NAME
	10/28/08	JH

THE INFORMATION HEREIN CONTAINS PROPIETARY INFORMATION OF SULLINS ELECTRONICS AND IS NOT TO BE REPRODUCED, USED OR DISCLOSED TO OTHERS FOR ANY PURPOSE EXCEPT AS SPECIFICALLY AUTHORIZED IN WRITING BY AN OFFICER OF SULLINS ELECTRONICS.

SULLINS CONNECTOR SOLUTIONS

TITLE
HEADER FEMALE, .079[2.00] CC, SR

PART NUMBER
SFH213-PP_N-D_ _-ID-BK

SIZE	CAGE CODE	DWG. NO.	REV
C	54453	11156	F

SCALE: 4:1 | SHEET 1 OF 1

FILE NAME: 11156, SFH213-PP_N-D_ _-ID-BK